THREE WAY NORMALLY CLOSED

DIRECT ACTING SOLENOID VALVE

C01

DESCRIPTION

Mechanical Characteristics:

Three Way Normally Closed Direct Acting Solenoid Valve with spring return.
Suitable for gaseous and liquid media compatible with the body and seals specified.
Suitable for Zero Bar applications.
Forged Brass body.
Stainless steel internal moving parts.
Solenoid can be rotated 360 degrees.

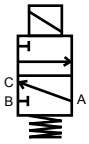

In:	B
Out:	A
Vent:	C
Coil de-energised:	Input B closed From A to vent C
Coil energised:	From B to A Vent C closed

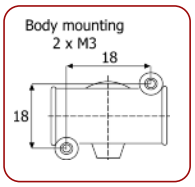

ELECTRICAL CHARACTERISTICS

Continuous duty glass reinforced nylon moulded coil with electrical connections suitable for DIN 43650B (C1 Coil), DIN 43650A (C2 Coil). Electrical socket connector. 2 poles + earth terminal.

COIL SPECIFICATION:	COIL SERIES: C1, C2
Insulation Class:	F (155ºC) - H (180ºC) upon request
Winding Wire Class:	H (180ºC)
Protection:	Watertight IP65
Duty:	Continuous (S.I) 100% ED
Power Consumption:	C1 Coil: 5.5W DC, 12VA (inrush) 8VA for AC coil
	C2 Coil: 8W DC, 16VA (inrush) 12VA for AC coil
Voltage Tolerance:	± 10%
Insulation:	> 1000 MOhm
Dielectric Strength:	> 2000 V/1'
Standard Voltages:	12, 24, 48, 110, 220 VAC 50/60 Hz
	12, 24, 48, 110, 220 VDC
Other Voltages Available Upon Request	

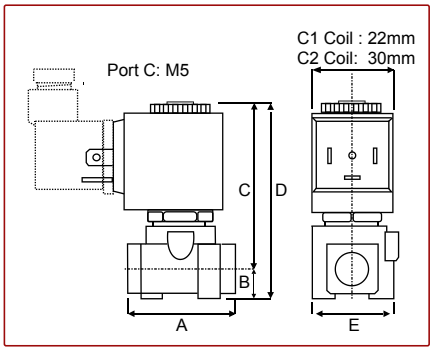

SPECIFICATIONS & DIMENSIONS

Model:							Orifice mm		Min. / Max. Differential Pressures. Bar.			KV Flow Factor L/min.	Weight Kg	Dimensions mm				
									Min.	Maximum								
A		B	C		D	E	Main Body	Port C		AC	DC			A	B	C	D	E
	C01	B		12			1.2	1.2	0	15	15	0.65	0.1	30	8	52	60	24.5
	C01	B		15			1.5	1.5	0	10	10	1	0.1	30	8	52	60	24.5
	C01	B		20			2.0	1.7	0	6	6	1.5	0.1	30	8	52	60	24.5

ORDER CODES

A	Coil Voltage	B	Port Connection	C	Seals (fluid temp. min. / max)	D	Body Material	E	Options
A	AC	B	1/8" BSP	B	NBR (-15°C to + 80°C)	T	Brass	Z	Stainless Steel Orifice
C	DC			V	VITON (-15°C to + 90°C)			1	Manual Override
				E	EPDM (-15°C to + 130°C)				

© Red Dragon Ltd 2013. www.reddragonvalves.com All rights reserved.

SOLENOID VALVE GENERAL INSTALLATION & MAINTENANCE

SAFE AREA SOLENOID VALVES DIN 43650-A (Large) DIN 43650-B (Small)

Red Dragon Valves use DIN electrical socket connectors to protect solenoid coil terminals and wiring.

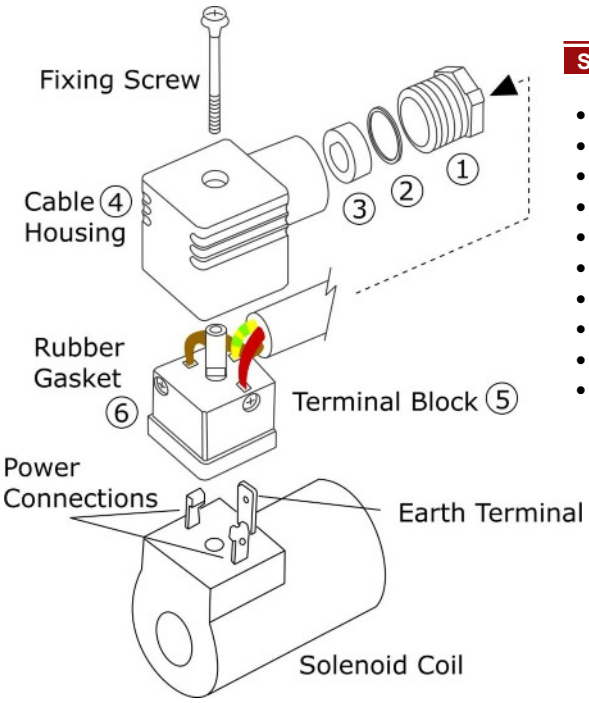

SECTION 1: DIN CONNECTOR ASSEMBLY

- Insert the electrical power cable through the gland assembly (1,2,3)
- Push the cable through cable housing (4)
- Connect power and earth cables to terminal block 5
- Push terminal block (5) backwards, inside cable housing (4)
- Place rubber gasket (6) on terminal block (5) front face
- Push terminal block onto solenoid coil terminals
- Push fixing screw through complete assembly
- Tighten fixing screw with small screwdriver
- Do not over tighten
- Tighten cable gland (1,2,3) by hand

SECTION 2: HOW TO INSTALL SOLENOID VALVES

Solenoid Valves can normally be installed and operate in any orientation. However, certain models are designed to operate in horizontal installations. Please contact Red Dragon for further information.

Installation Procedure:

Check that the Solenoid Valve is the correct product ordered for the application:

- Isolate the site electrical power supply
- Isolate the site media supply (dependant on the application)...air, water, steam etc.
- Insert the valve onto the pipe, ensuring that the flow direction is observed.....IN for incoming media, or an Arrow stamped on the valve body.
- Ensure that the pipe connections are free from burrs or loose pipe thread tape
- Tighten all pipe joints
- Connect electrical power supply via DIN electrical socket connector, as detailed in section 1
- Ensure that DIN connector is properly connected to solenoid coil and the gasket is installed correctly
- Apply media pressure and check for leaks

SECTION 3: MAINTENANCE PROCEDURE FOR SOLENOID VALVES

In the unlikely event of a valve malfunction, or routine maintenance, follow these instructions:

- Isolate the site electrical power supply
- Isolate the site media supply (dependant on the application)...air, water, steam etc.
- Remove the solenoid coil by unscrewing the coil retention nut anti-clockwise
- Remove the coil tube stem by unscrewing anti-clockwise
- Carefully remove the plunger assembly (inside the coil stem)
- Check the plunger assembly for damage or worn seals
- Check the face inside the coil stem for foreign particles that could prevent correct operation
- For Pilot Diaphragm Solenoid Valves: remove the top cover housing and check the diaphragm for damage and blocked transfer port.
- Re-assemble the valve in reverse order, ensuring that all parts are cleaned and assembled correctly

© Red Dragon Ltd 2013. www.reddragonvalves.com All rights reserved.